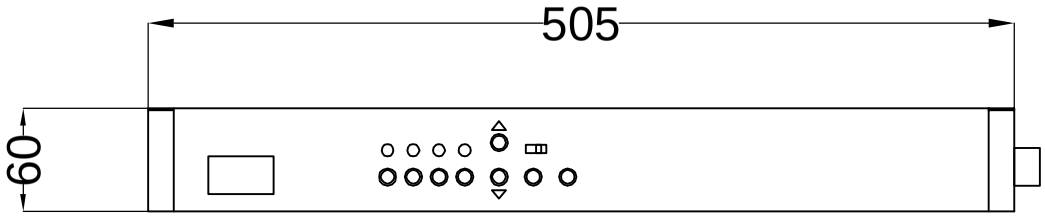

TOP VIEW

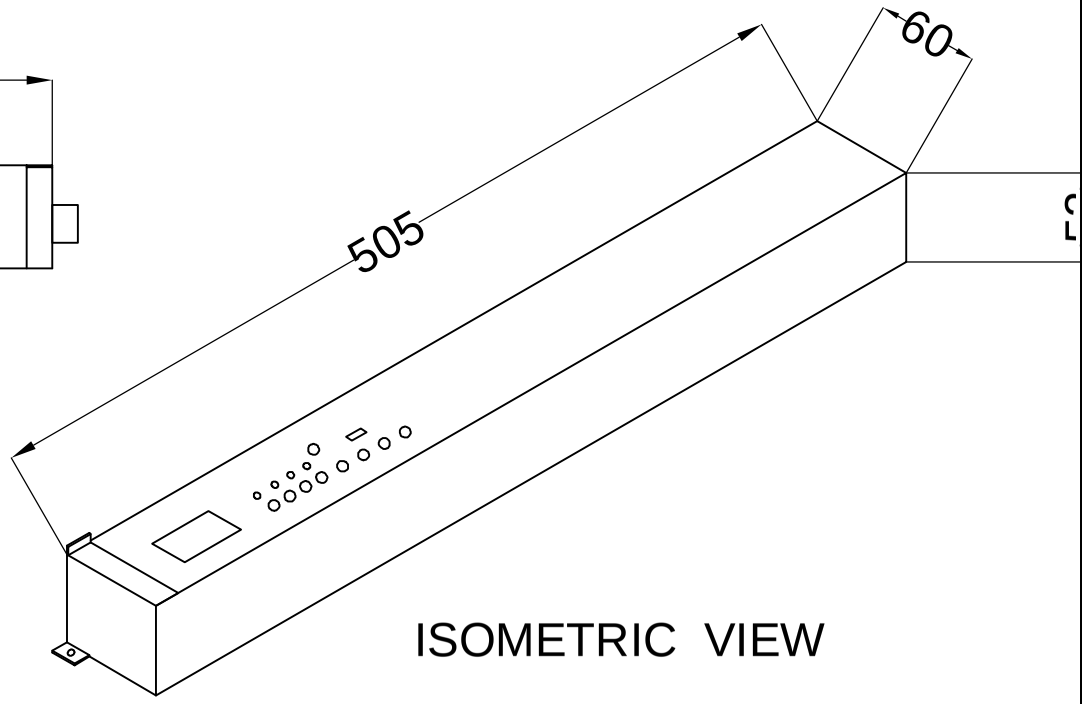

ISOMETRIC VIEW

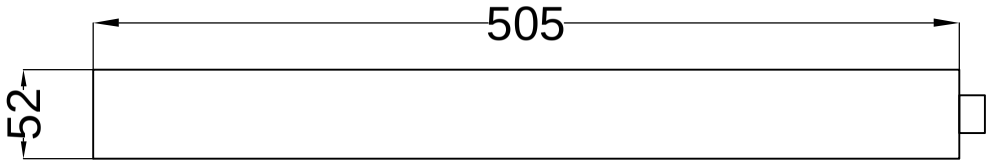

FRONT VIEW

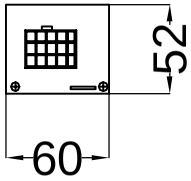

SIDE VIEW

SCALE-NTS	GROUP :- Automatic Entrance Doors				PRODUCT :- Automatic Door Kit		MODEL NO:- Dortex-SDCW-SD806MF	
This drawing is the soul property of (TAS) Do not copy/reproduce /share with others without our permission.	REV	DATE	DESCRIPTION	DRAWN BY	APPROVED BY	DATE	DRAWN BY	CHECKED BY	APPROVED BY
	00	21-09-18	ISSUED FOR APPROVAL	SOHRAB KHAN	MOHD.AMIL	21-09-18	SOHRAB KHAN	MOHD.AMIL	KAPIL SACHDEV
						PRO NO:- 4518	DRAWING NO :- GA-235(PRO4518) Dortex-SDCW-SD806MF		

toshi
Automation Solutions