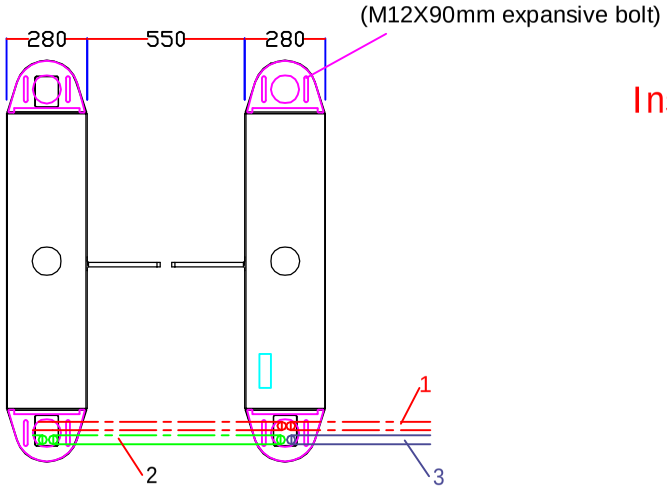

TOP VIEW

Installation Manual:

1. The ⌀25mm PVC tube for AC 220V or AC 110V Power Wire (3 X ⌀2.0mm) .
2. The tube for connecting two equipments in the same passage wire (16 X Ø0.5mm) .
3. The tube for RS485 wire (2 X Ø0.5mm) , TCP/IP wire (8 core) , Manually openning the turnstile wire (4 X Ø0.3mm) . The signal wire length should be less than 100m .
4. It is PCB board part .
5. Fixing the equipment with M12 X 90mm expansive bolt .

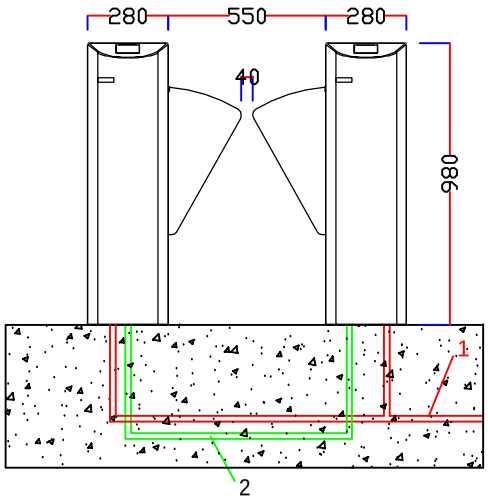

FRONT VIEW

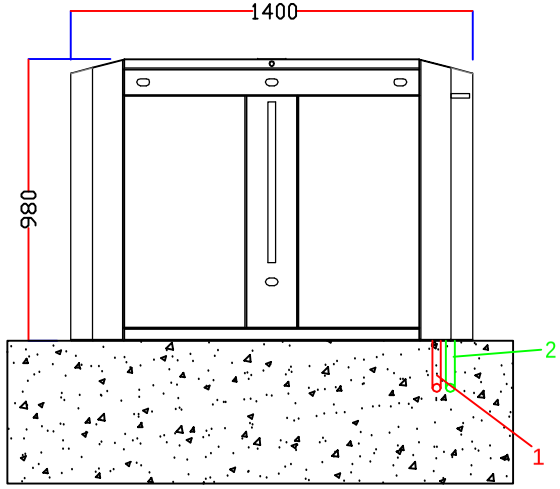

SIDE VIEW

SCALE-NTS	GROUP :- Smart Security Flap Barriers				PRODUCT :- Single Lane Flap Barrier-Normal Lane		MODEL NO:- Turbo 2*TDB-201-S		
This drawing is the soul property of (TAS) Do not copy/reproduce /share with others without our permission.	REV	DATE	DESCRIPTION	DRAWN BY	APPROVED BY	DATE	DRAWN BY	CHECKED BY	APPROVED BY
	00	06-10-18	ISSUED FOR APPROVAL	SOHRAB KHAN	MOHD.AMIL	06-10-18	SOHRAB KHAN	MOHD.AMIL	KAPIL SACHDEV
						PRO NO:- 3878	DRAWING NO :- GA-370 (PRO 3878) Turbo 2*TDB-201-S		

toshi
Automation Solutions